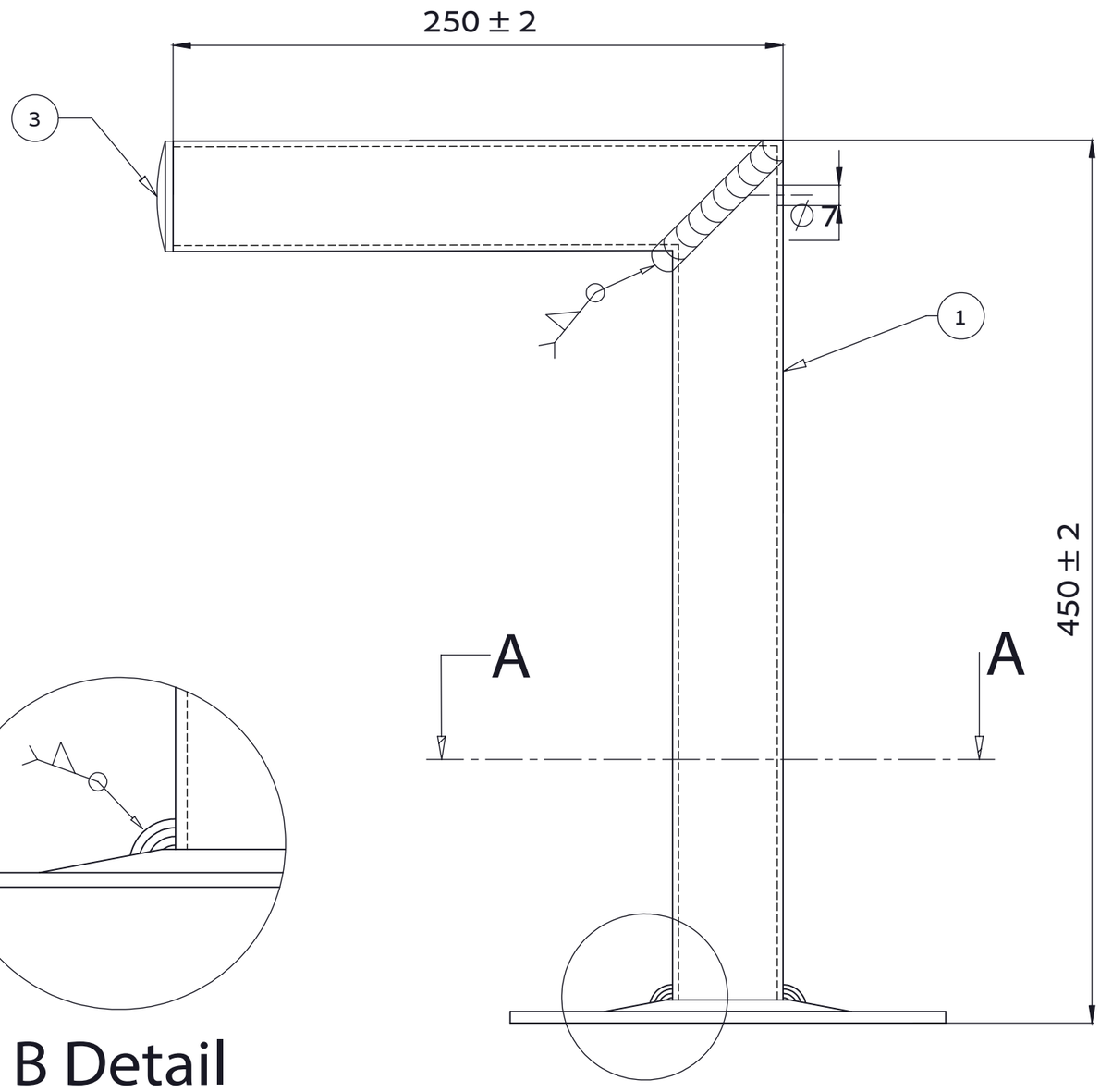


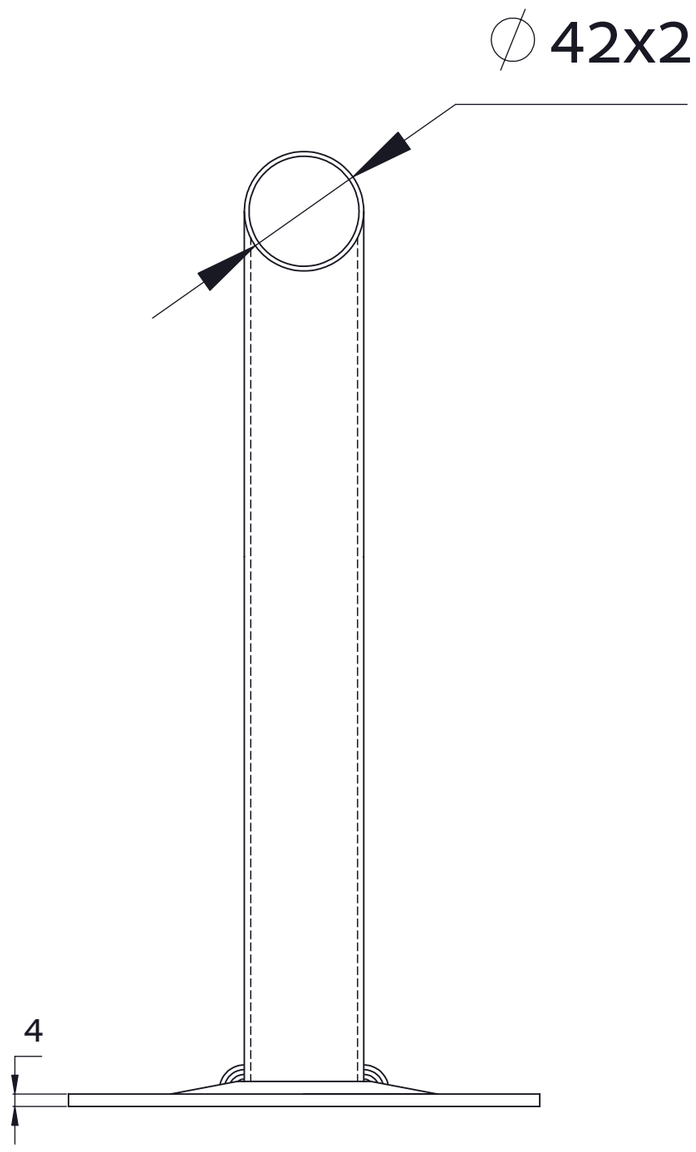


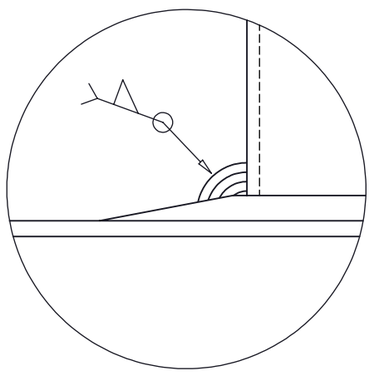

B Detail

B

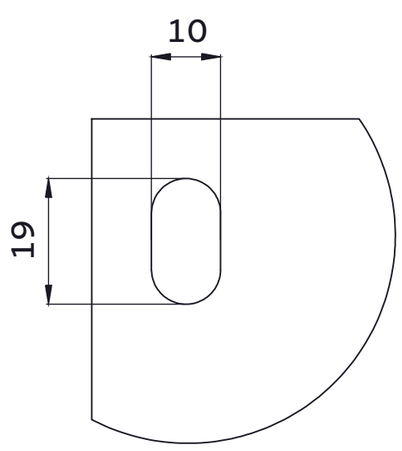


C Detail

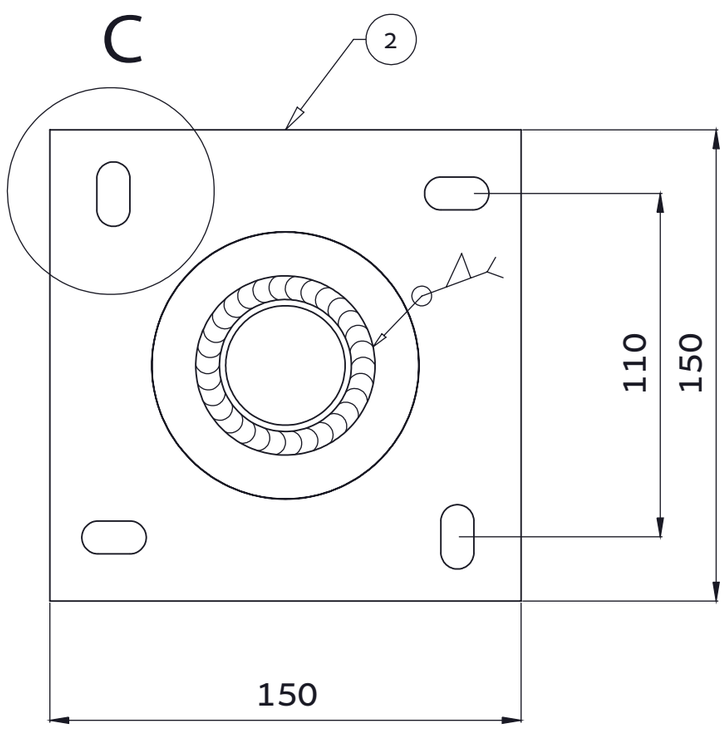

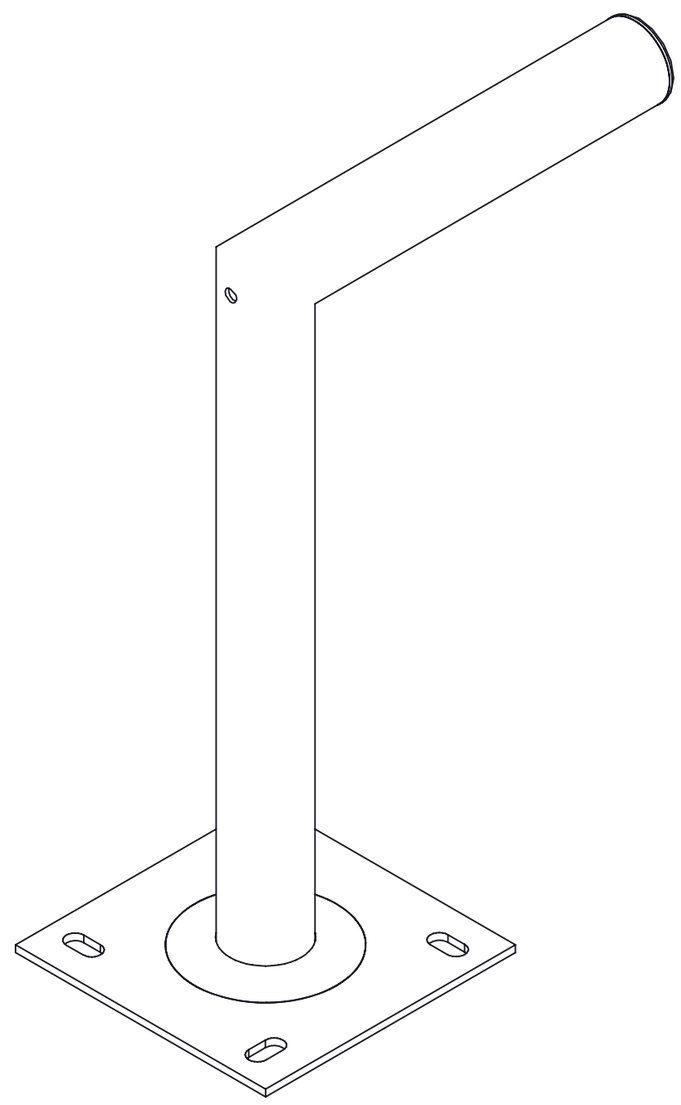
A-A Cross Section